Unbalance Protection Relay

FEATURES

- Compensation of the natural unbalance (current or voltage) of the capacitor bank
- Display of the actual unbalance current or unbalance voltage
- Self monitoring function with own alarm contact
- Separately adjustable thresholds and delay times for alarm and trip
- Adjustable drop-off-value for alarm / trip
- Separately programmable reset mode for alarm / trip (automatic or manual reset)
- In manual mode, after power interruption, memory of switching outputs, original state, and display indications
- Adjustable transformer ratio (voltage / current)
- Thresholds and readings as current or voltage value or as percentage value related to the nominal input range of current or voltage channel
- Separate password protection for setup and operator menu
- Storage of the last five trips and alarms with maximum value during delay time
- One free programmable output relay (Rel. 3)
- Display flashing as visual indicator under the alarm / trip condition

APPLICATIONS

- Monitoring unbalance currents of capacitor banks
  - Double-star connection
  - Bridge connection
- Monitoring unbalance voltages of capacitor banks

QUICK REFERENCE DATA	
Type	Unbalance protection relay
Description	Unbalance protection relay for capacitor banks connected in double star or bridge connection
Rated data	Supply voltages: 40 V_{AC} to 250 V_{AC}, 50 Hz to 60 Hz / 40 V_{DC} to 300 V_{DC}
Current data	1 current input: 20 mA to 5 A
Protecting level	IP50, IP54 by using a gasket; rear: IP20

TECHNICAL DATA	
Measuring voltage	0.2 V to 20 V, burden 284 kΩ
Relay outputs	AC: max. 1250 VA DC: 30 V / 5 A, 60 V / 1 A, 110 V / 0.5 A, 220 V / 0.3 A
Digital input	Blocking alarm / trip via digital input
Interfaces	TTL, rear (optional: RS485, Modbus RTU)
Temperature	Operation: -20 °C to +70 °C Storage: -40 °C to +85 °C
Humidity	0 % to 95 %, without moisture condensation
Overvoltage class standards	II, pollution degree 3 (IEC 60664-1)
Standards	IEC 60664-1, IEC 61010-1, IEC 61326
Conformity and listing	CE
Terminals	Screw type, maximum 4 mm^2
Casing front	Instrument casing plastic (UL 94 V-0), rear: metal
Weight	0.65 kg

Note

- Complete mounting instructions / manual available at www.vishay.com/doc?13172

For technical questions, contact: esta@vishay.com

THIS DOCUMENT IS SUBJECT TO CHANGE WITHOUT NOTICE. THE PRODUCTS DESCRIBED HEREIN AND THIS DOCUMENT ARE SUBJECT TO SPECIFIC DISCLAIMERS, SET FORTH AT www.vishay.com/doc?91000

The operation of high- and medium-voltage capacitors needs to be monitored constantly. Most such capacitors use insulating oil for their dielectrics, and monitoring is required to avoid any combustion of this material in event of failure. This monitoring can be done either by monitoring the unbalance current or unbalance voltage of capacitor groups.

However, this voltage / current may change in case of any failure of one capacitor, for instance caused by a flashover inside the wound foils.

APPLICATIONS

MONITORING UNBALANCING CURRENT

Double-Star Connection

In a double-star connection, the star points of two capacitor groups are connected together as shown in Fig. 1. In the event of a failure, i.e., element breakdown or group short-circuit, the star point of the respective branch is shifted and causes a current flow between the star points. The intensity of the current is determined by the capacitor construction and the number of capacitors.

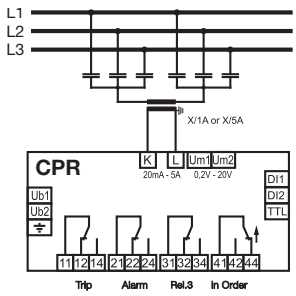

Fig. 1 - Double-star connection

Bridge Connection

In a bridge connection, as shown in Fig. 2, the capacitor bank is built up with four bridge branches, with two branches each constituting a series connection. The medium potentials of the branches are connected by a current transformer. The division of the bridge branches preferably should be symmetrical. An unsymmetrical structure would also be possible. However, with an unsymmetrical structure, the pick-up values must be set to the more sensitive branch.

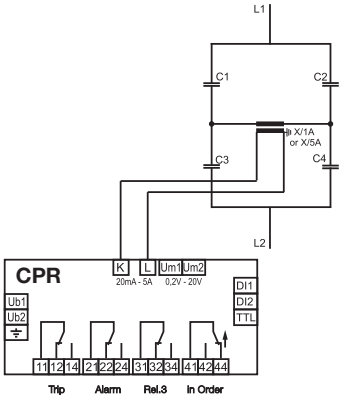

Fig. 2 - Bridge connection

MONITORING UNBALANCE VOLTAGE

To monitor the capacitor bank via the voltage, the voltage of the capacitors of the three phases is connected to three two-pole insulated PTs, which are on the secondary side connected in series. In Fig. 3, the ESTAsym CPR is measuring the voltage at this open delta.

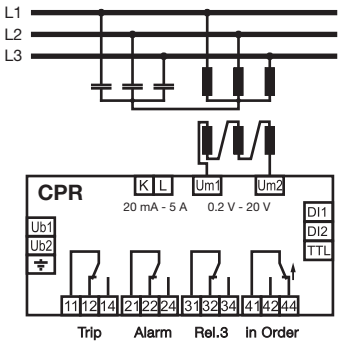

Fig. 3

For technical questions, contact: esta@vishay.com
THIS DOCUMENT IS SUBJECT TO CHANGE WITHOUT NOTICE. THE PRODUCTS DESCRIBED HEREIN AND THIS DOCUMENT ARE SUBJECT TO SPECIFIC DISCLAIMERS, SET FORTH AT www.vishay.com/doc?91000

HARDWARE

- Wide range of power supplies suitable for DC/AC voltages
- X/1 or X/5, without conversion on the device
- Mechanical NO and NC contacts for outputs
- Measurement signal is passed via low-pass filter
- Digital input to block alarm function
- LCD with backlight
- Sign of life signal
- Capacitor protection relay in plastic case
- Backside is made of metal

OPTIONAL FEATURES

Interface RS485, Modbus RTU
Programming via USB 2.0 interface

FUNCTION

The ESTAsym CPR is designed to monitor medium- and high voltage capacitors. The ESTAsym CPR can be set from the menu to monitor current or voltage. The device can monitor two threshold levels for alarm / trip. All thresholds / readings can be set either as a specific current or voltage value or as a percentage of the maximum value. Once the alarm or trip level is reached, the appropriate relay will operate, after the programmed delay time has elapsed. Both output relays can be programmed to be held in the alarm / trip position until reset by the user. Alternatively they can be set to automatically reset if the fault condition has cleared. A further output relay can be used to operate when the alarm / trip or both alarm and trip have operated. The ESTAsym CPR can record details of the last five alarm and trip operations. An natural unbalance (out of balance or asymmetrical value) can be programmed into the device if required. This natural unbalance is subtracted from the measured value and allows a more exact setting of the thresholds.

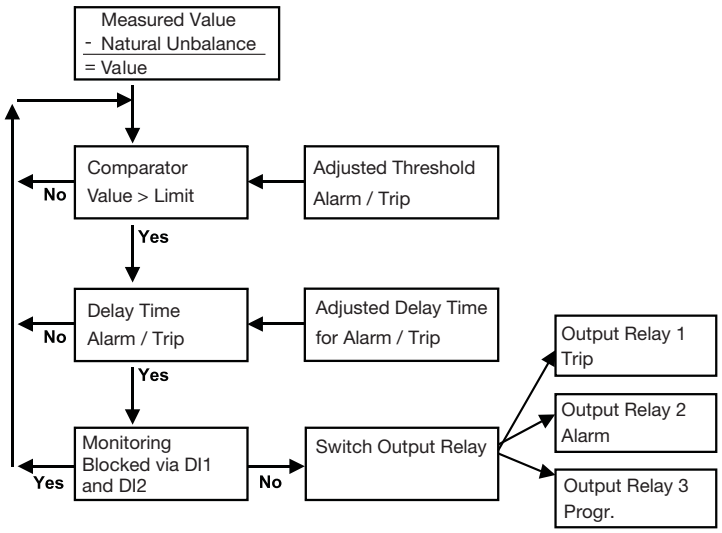

DIMENSIONS in millimeters

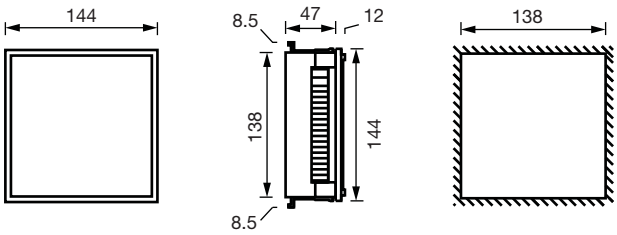

For technical questions, contact: esta@vishay.com
THIS DOCUMENT IS SUBJECT TO CHANGE WITHOUT NOTICE. THE PRODUCTS DESCRIBED HEREIN AND THIS DOCUMENT ARE SUBJECT TO SPECIFIC DISCLAIMERS, SET FORTH AT www.vishay.com/doc?91000

Disclaimer

ALL PRODUCT, PRODUCT SPECIFICATIONS AND DATA ARE SUBJECT TO CHANGE WITHOUT NOTICE TO IMPROVE RELIABILITY, FUNCTION OR DESIGN OR OTHERWISE.

Vishay Intertechnology, Inc., its affiliates, agents, and employees, and all persons acting on its or their behalf (collectively, “Vishay”), disclaim any and all liability for any errors, inaccuracies or incompleteness contained in any datasheet or in any other disclosure relating to any product.

Vishay makes no warranty, representation or guarantee regarding the suitability of the products for any particular purpose or the continuing production of any product. To the maximum extent permitted by applicable law, Vishay disclaims (i) any and all liability arising out of the application or use of any product, (ii) any and all liability, including without limitation special, consequential or incidental damages, and (iii) any and all implied warranties, including warranties of fitness for particular purpose, non-infringement and merchantability.

Statements regarding the suitability of products for certain types of applications are based on Vishay's knowledge of typical requirements that are often placed on Vishay products in generic applications. Such statements are not binding statements about the suitability of products for a particular application. It is the customer's responsibility to validate that a particular product with the properties described in the product specification is suitable for use in a particular application. Parameters provided in datasheets and / or specifications may vary in different applications and performance may vary over time. All operating parameters, including typical parameters, must be validated for each customer application by the customer's technical experts. Product specifications do not expand or otherwise modify Vishay's terms and conditions of purchase, including but not limited to the warranty expressed therein.

Hyperlinks included in this datasheet may direct users to third-party websites. These links are provided as a convenience and for informational purposes only. Inclusion of these hyperlinks does not constitute an endorsement or an approval by Vishay of any of the products, services or opinions of the corporation, organization or individual associated with the third-party website. Vishay disclaims any and all liability and bears no responsibility for the accuracy, legality or content of the third-party website or for that of subsequent links.

Except as expressly indicated in writing, Vishay products are not designed for use in medical, life-saving, or life-sustaining applications or for any other application in which the failure of the Vishay product could result in personal injury or death. Customers using or selling Vishay products not expressly indicated for use in such applications do so at their own risk. Please contact authorized Vishay personnel to obtain written terms and conditions regarding products designed for such applications.

No license, express or implied, by estoppel or otherwise, to any intellectual property rights is granted by this document or by any conduct of Vishay. Product names and markings noted herein may be trademarks of their respective owners.

© 2023 VISHAY INTERTECHNOLOGY, INC. ALL RIGHTS RESERVED